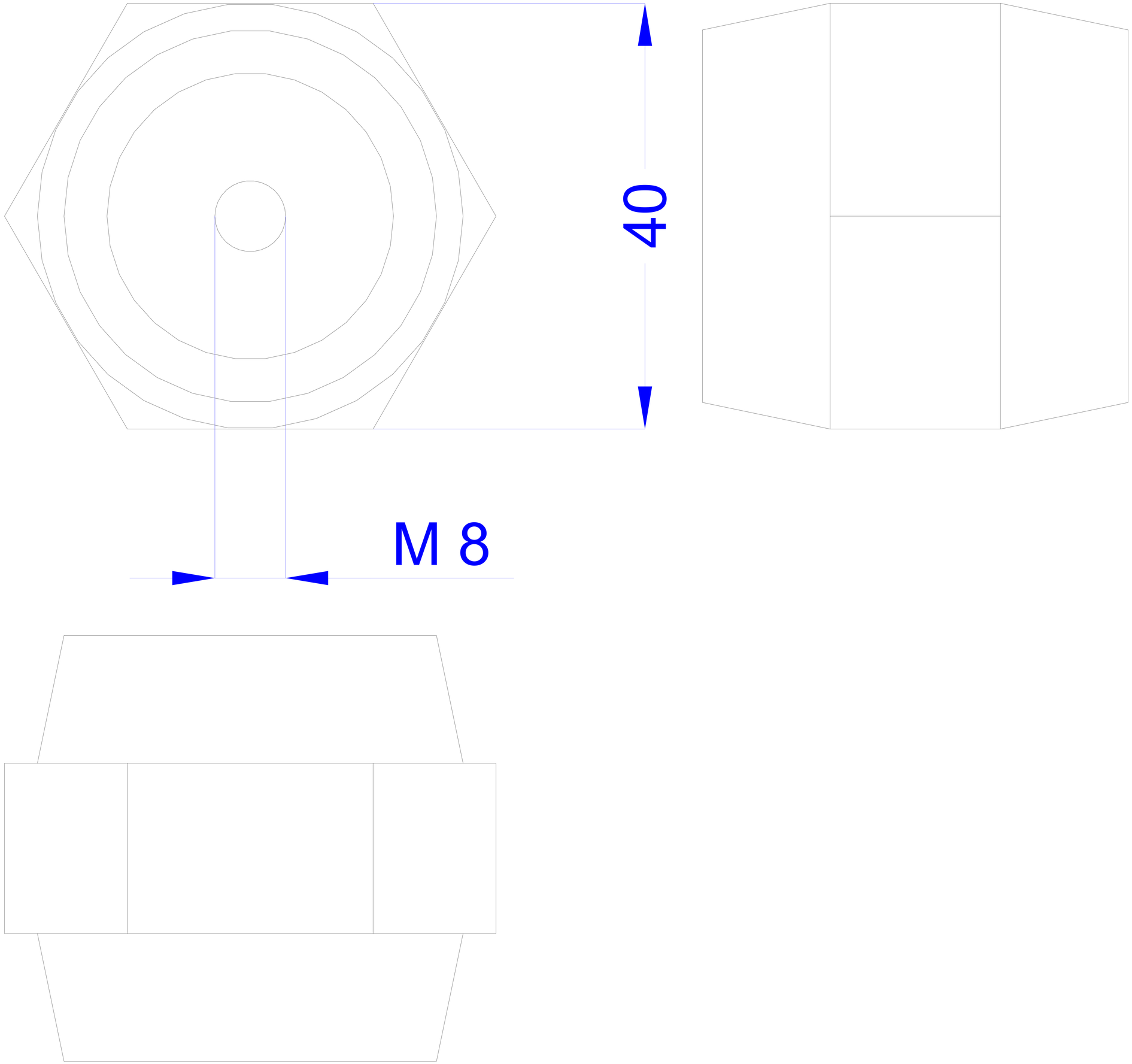
40
M 8