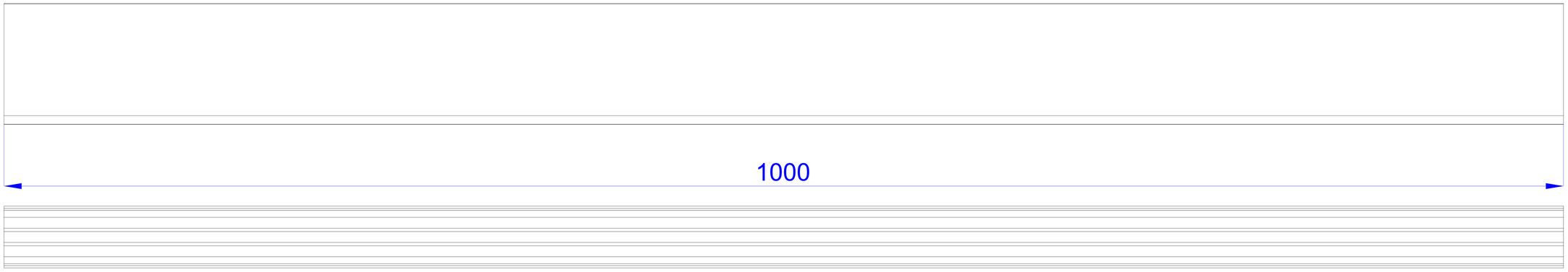
1000

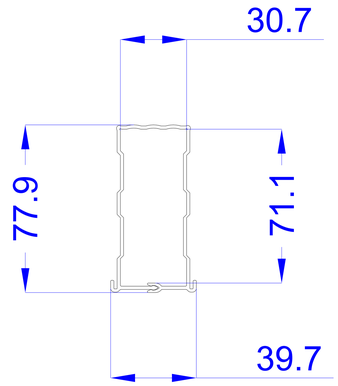
30.7
77.9
71.1
39.7