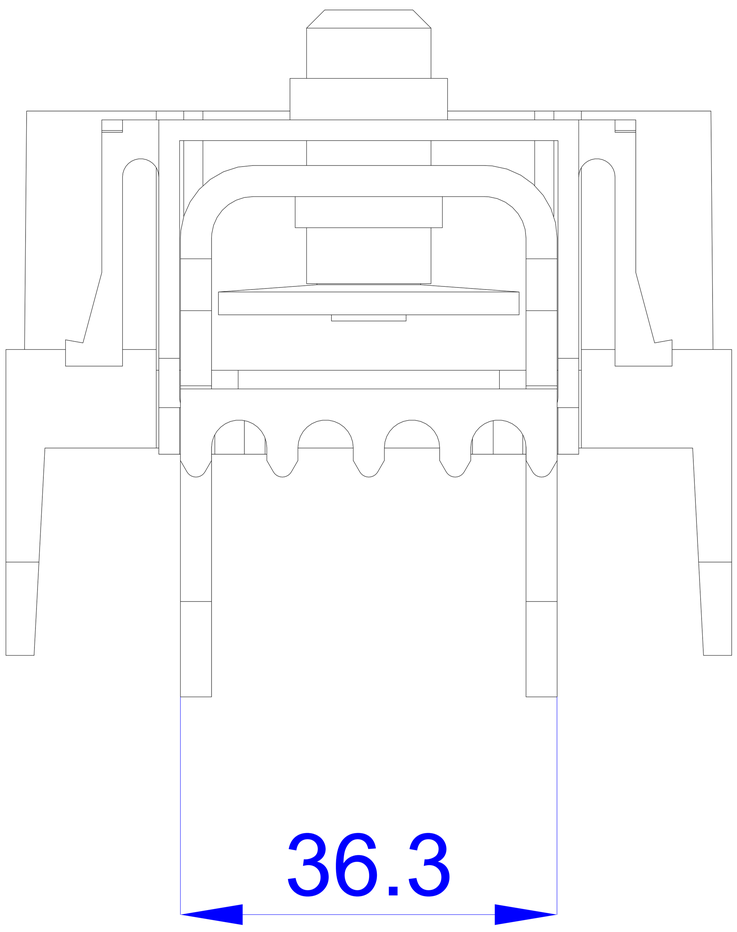
36.3

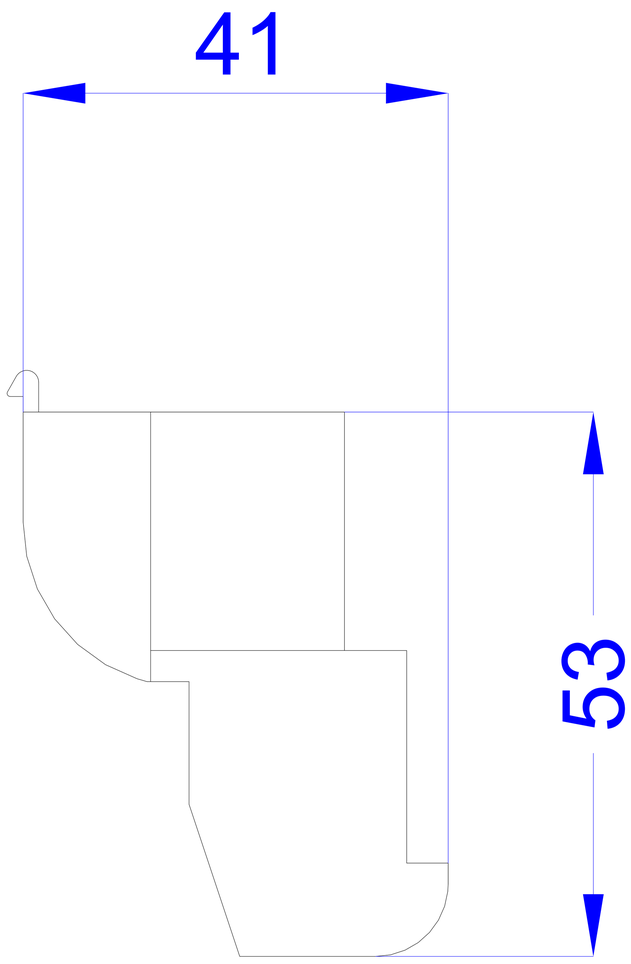
41
53

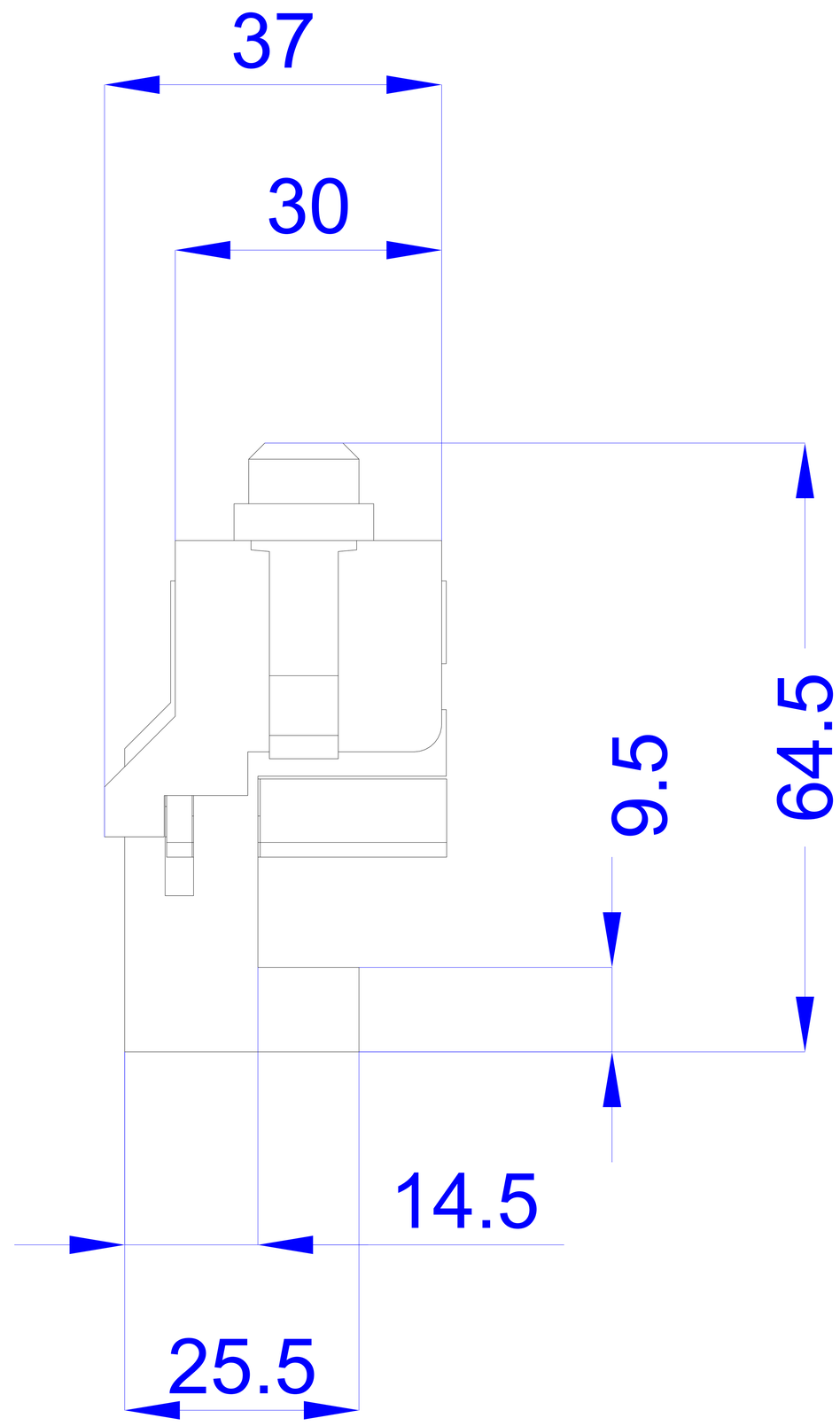
37
30
64.5
9.5
14.5
25.5

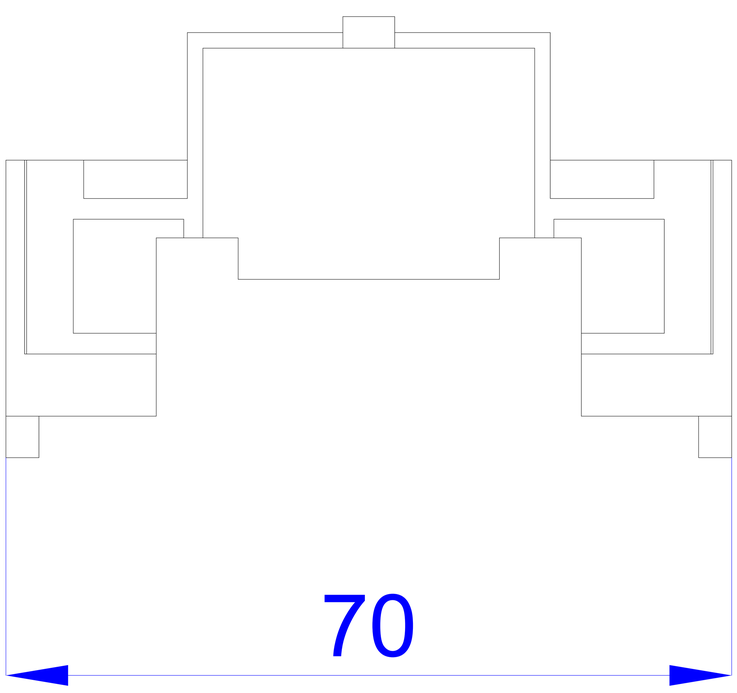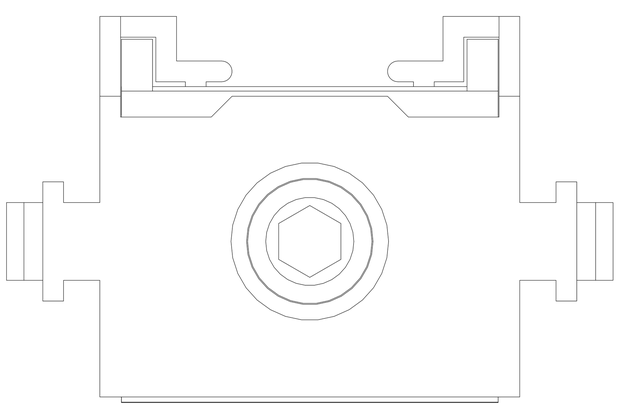
70