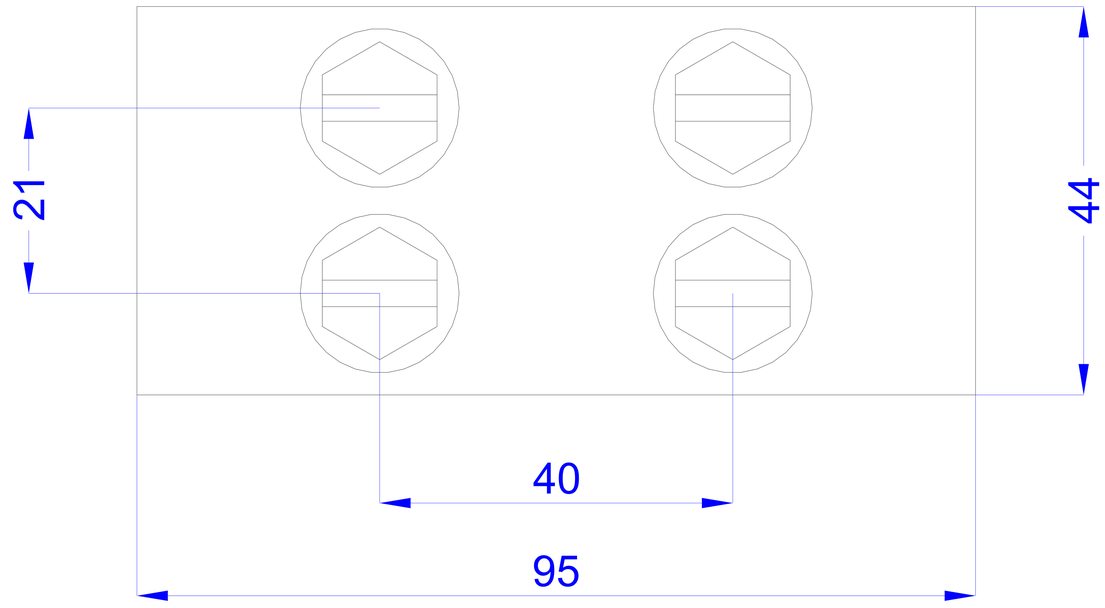
21
44
40
95

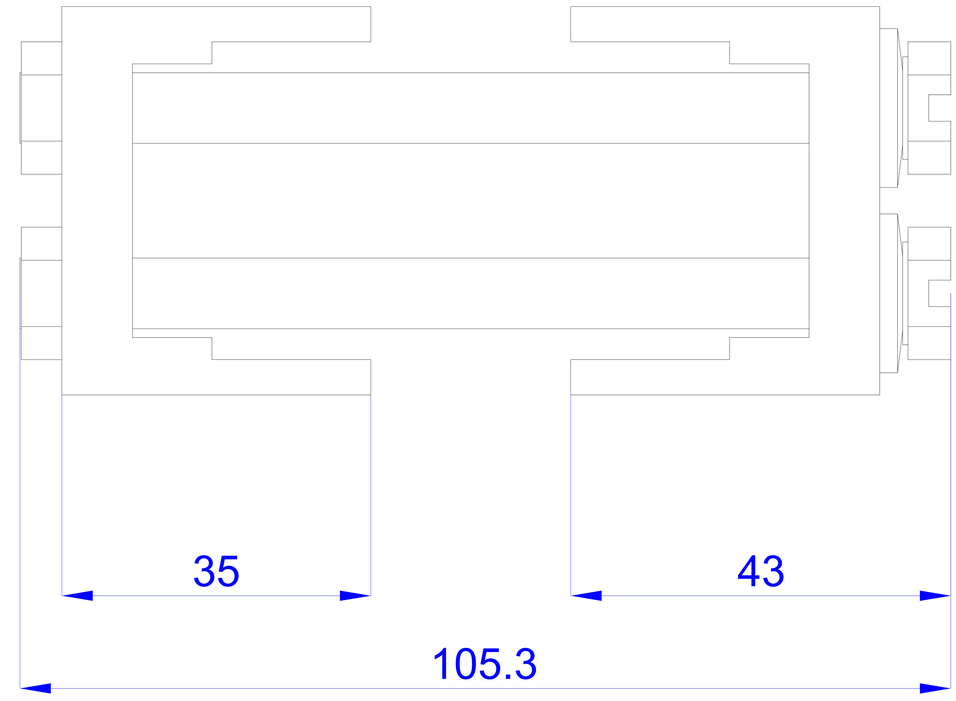
35
43
105.3