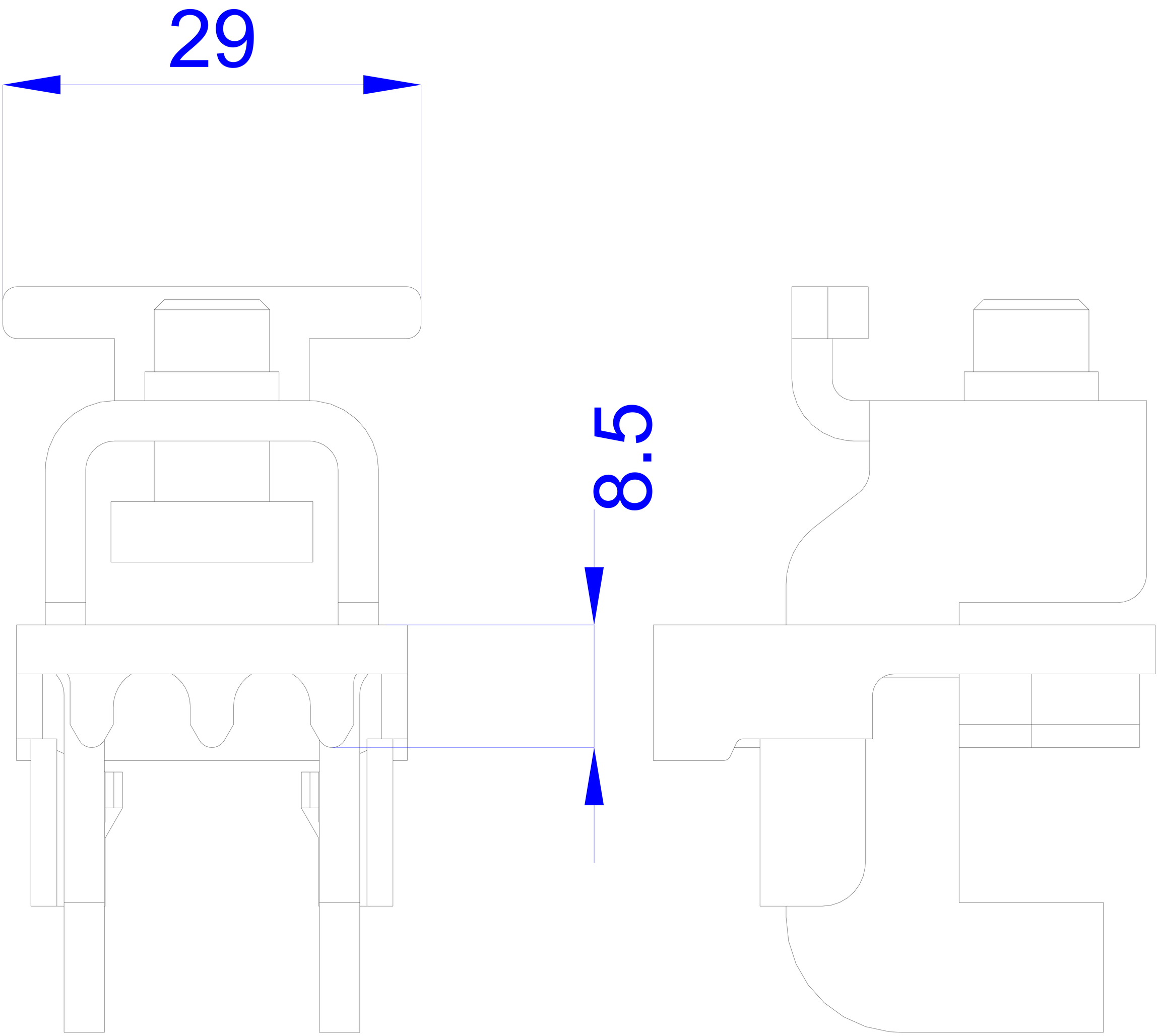
29
8.5

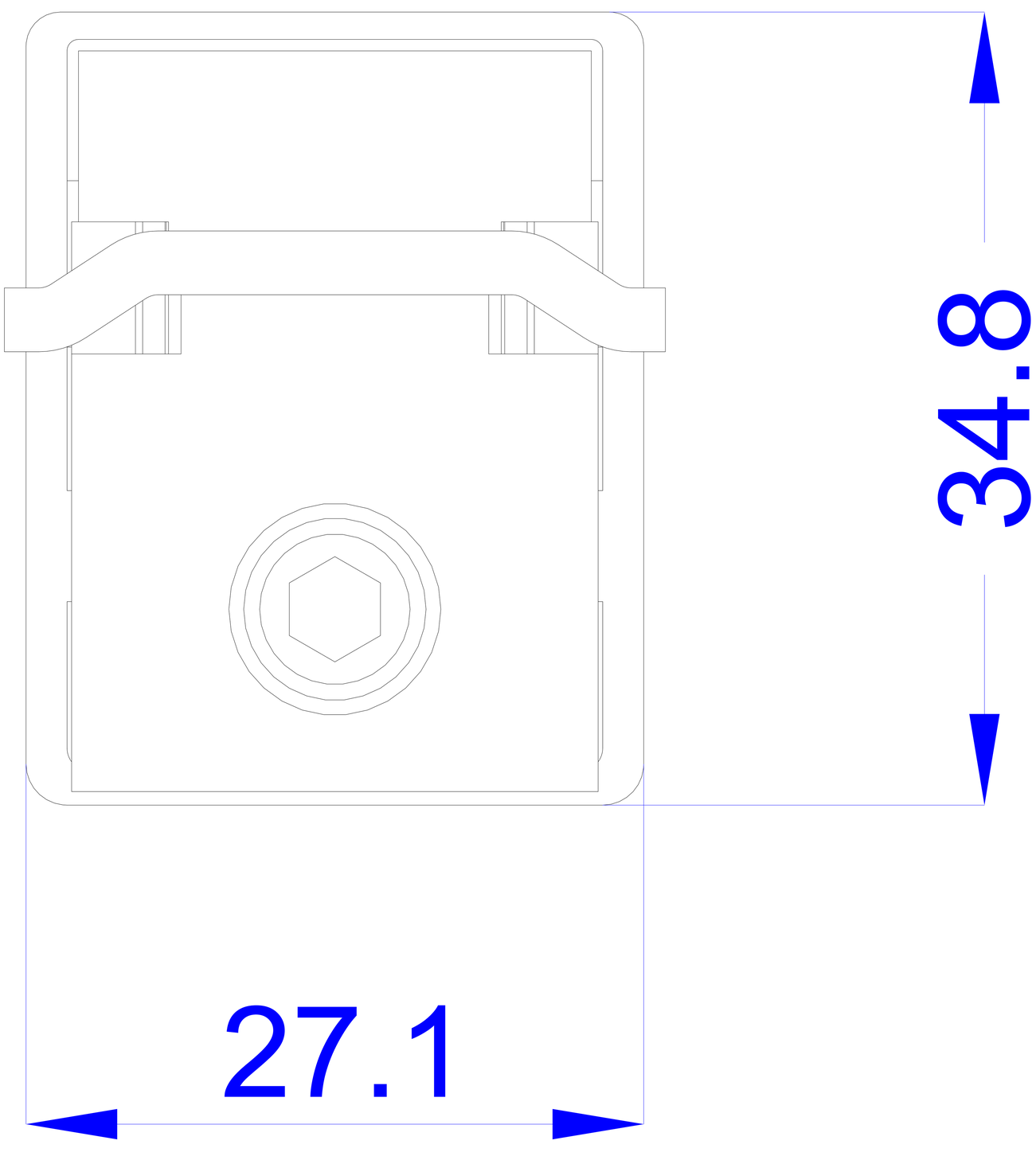
34.8
27.1