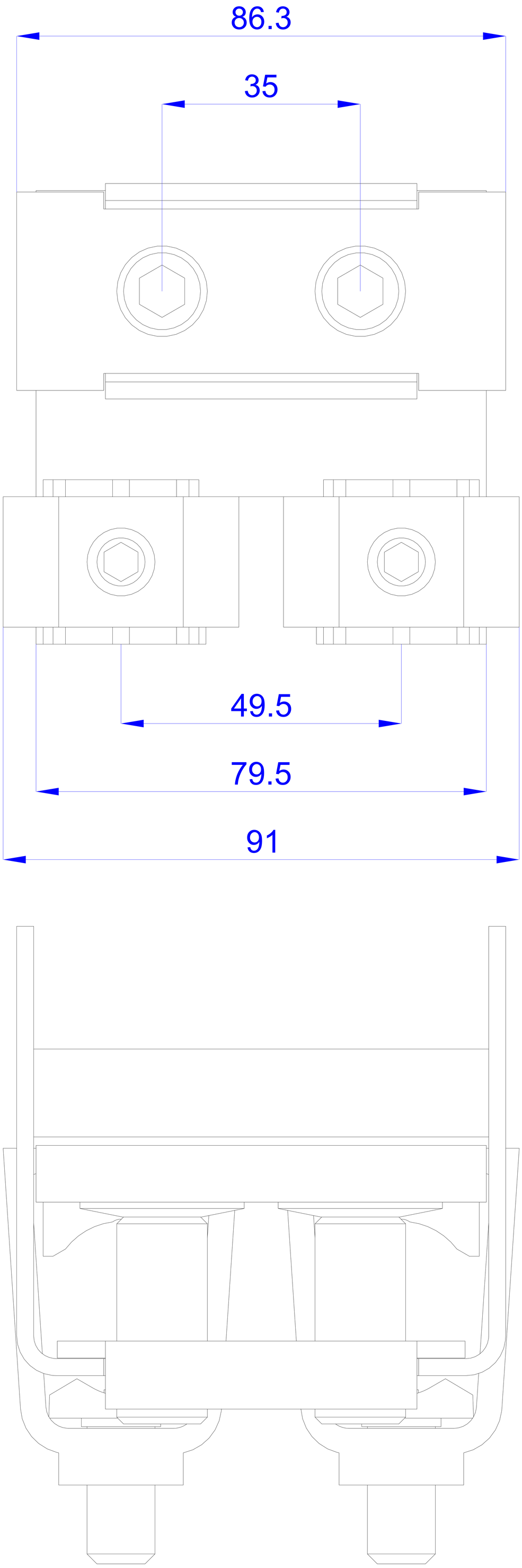
86.3
35
49.5
79.5
91

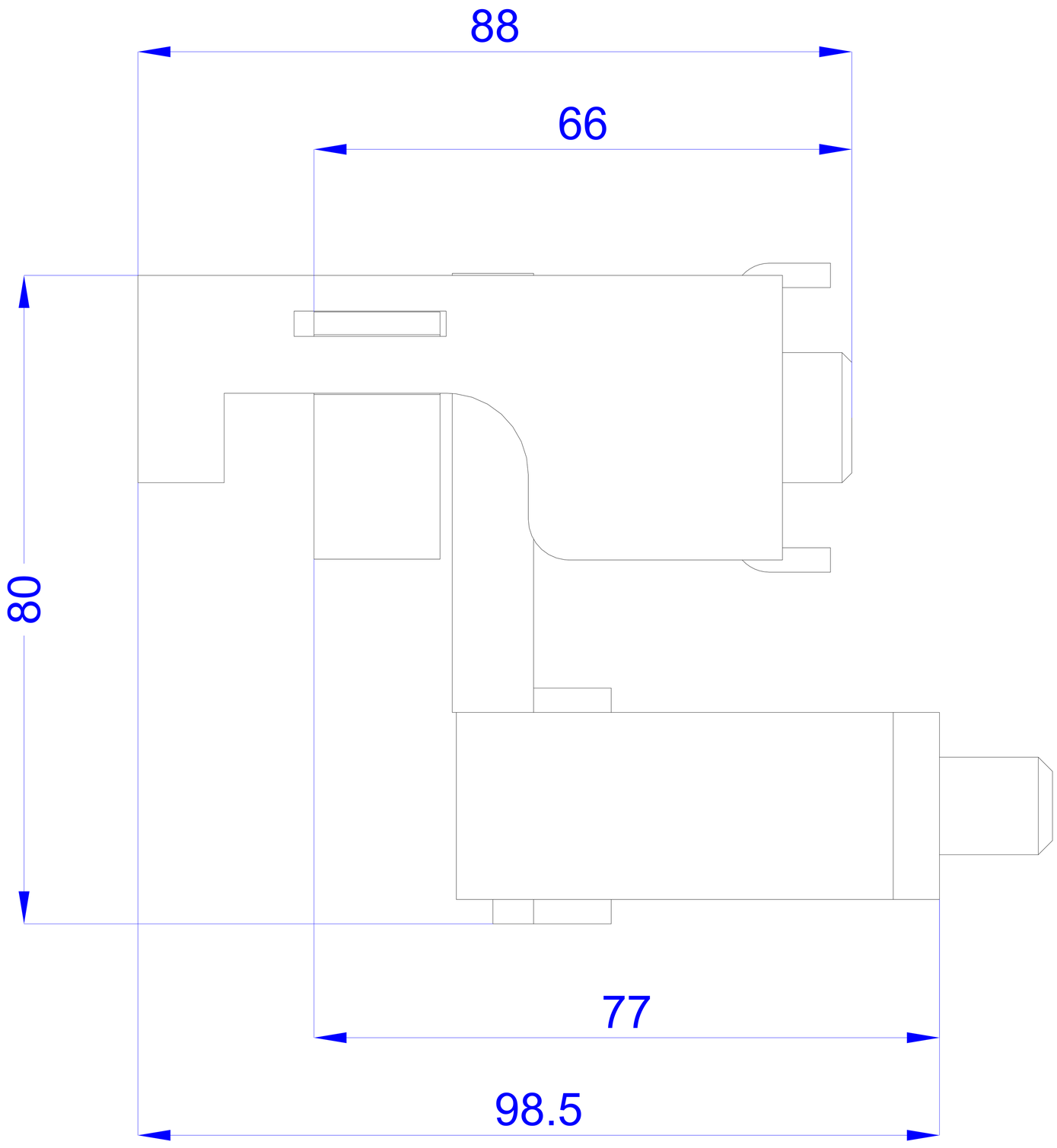
88
66
80
77
98.5