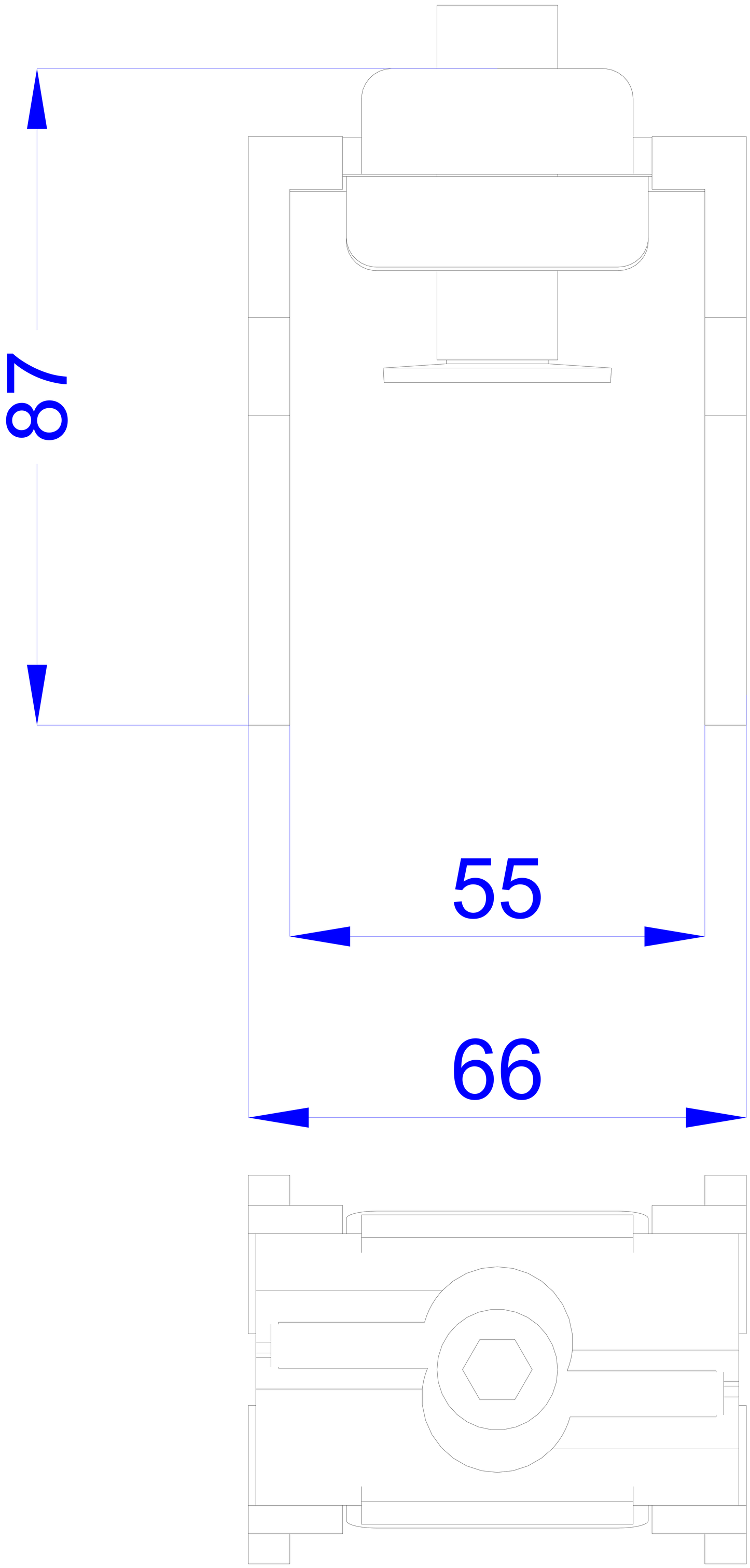
87
55
66

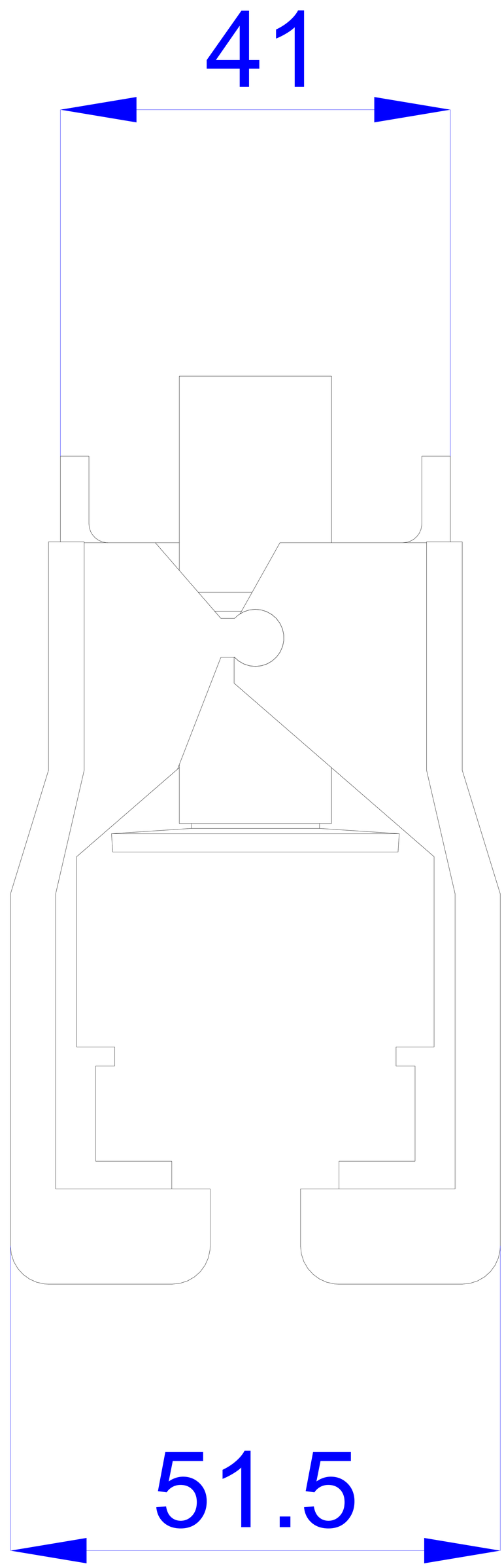
41
51.5