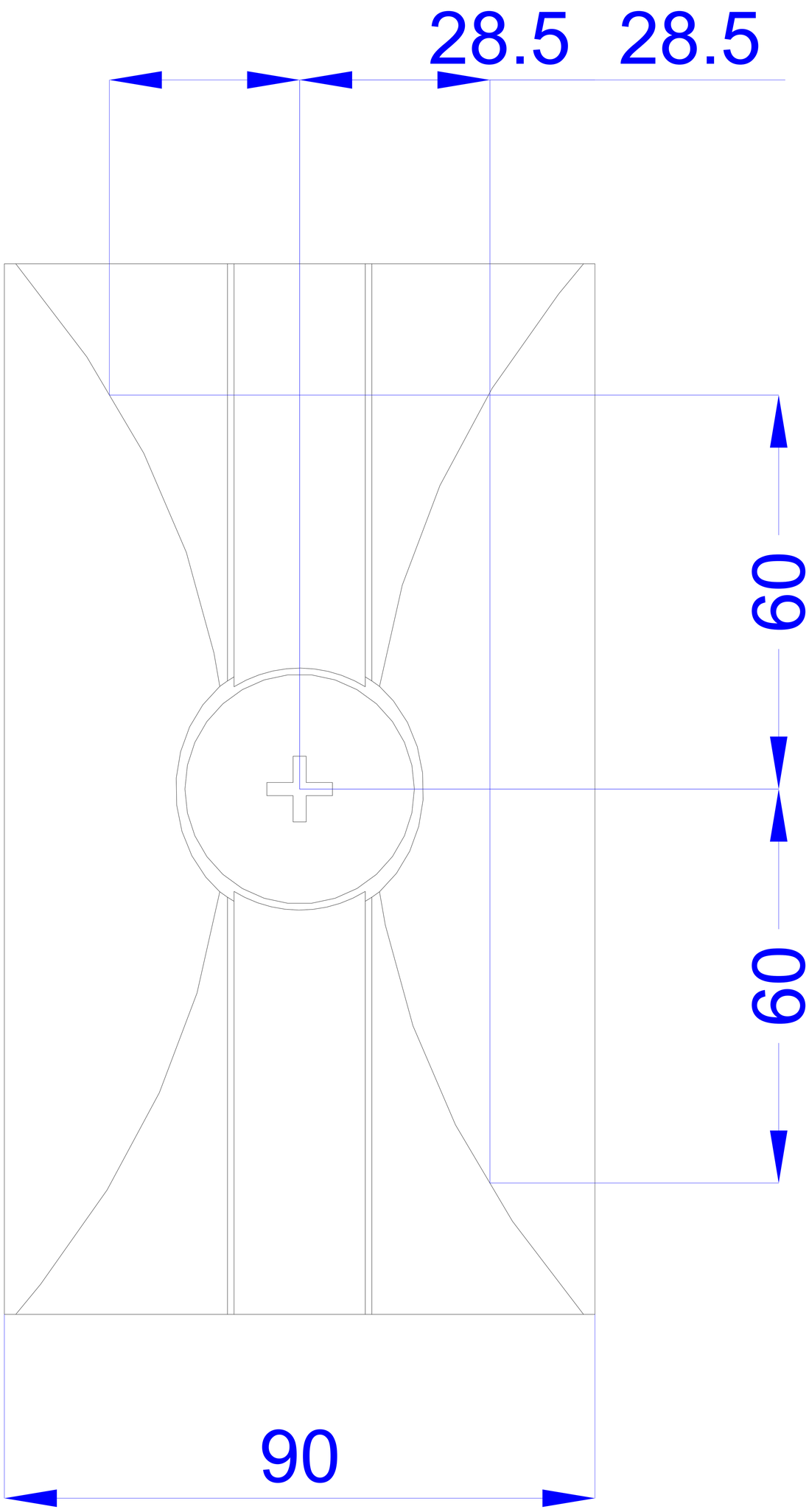
28.5
28.5
60
60
90

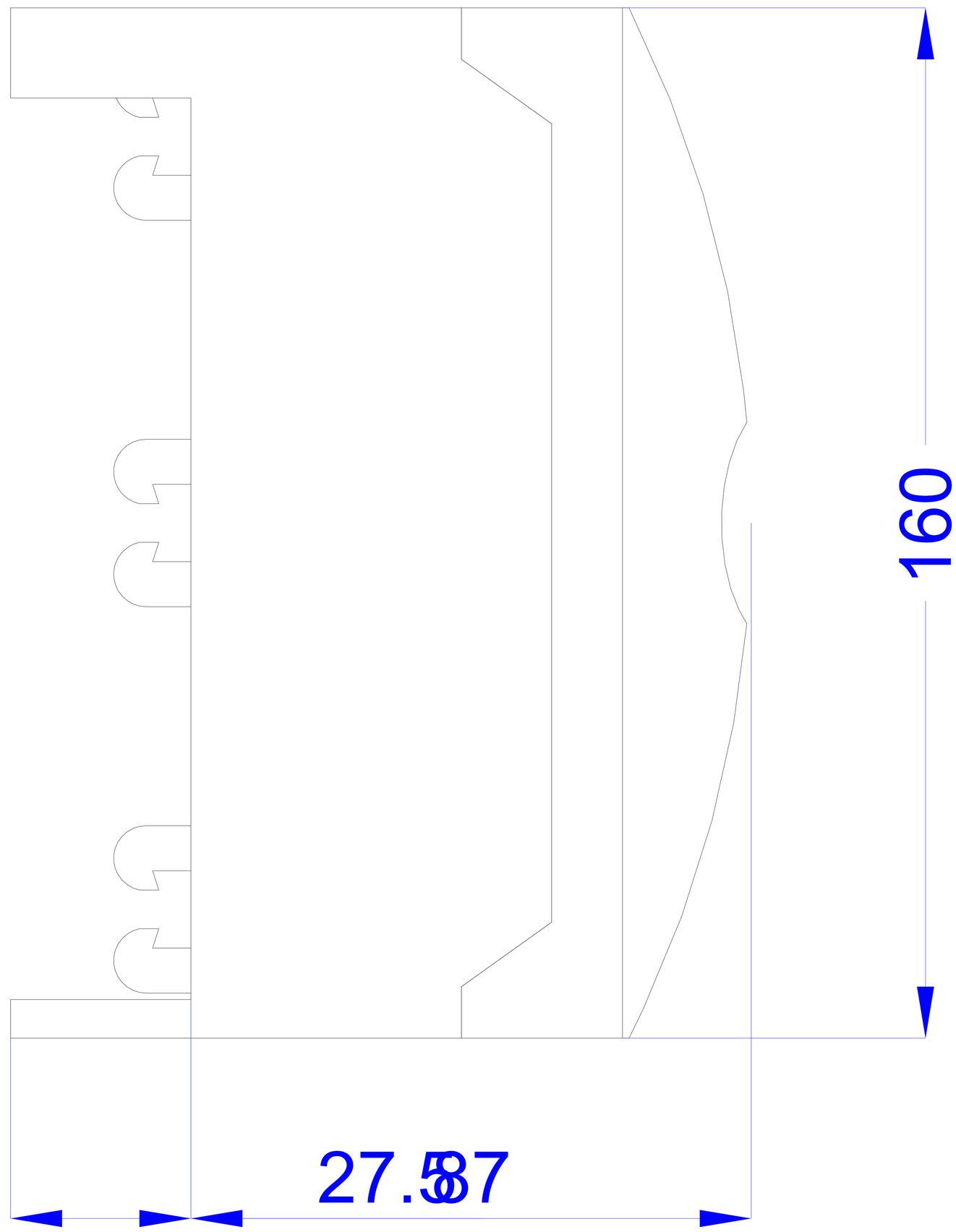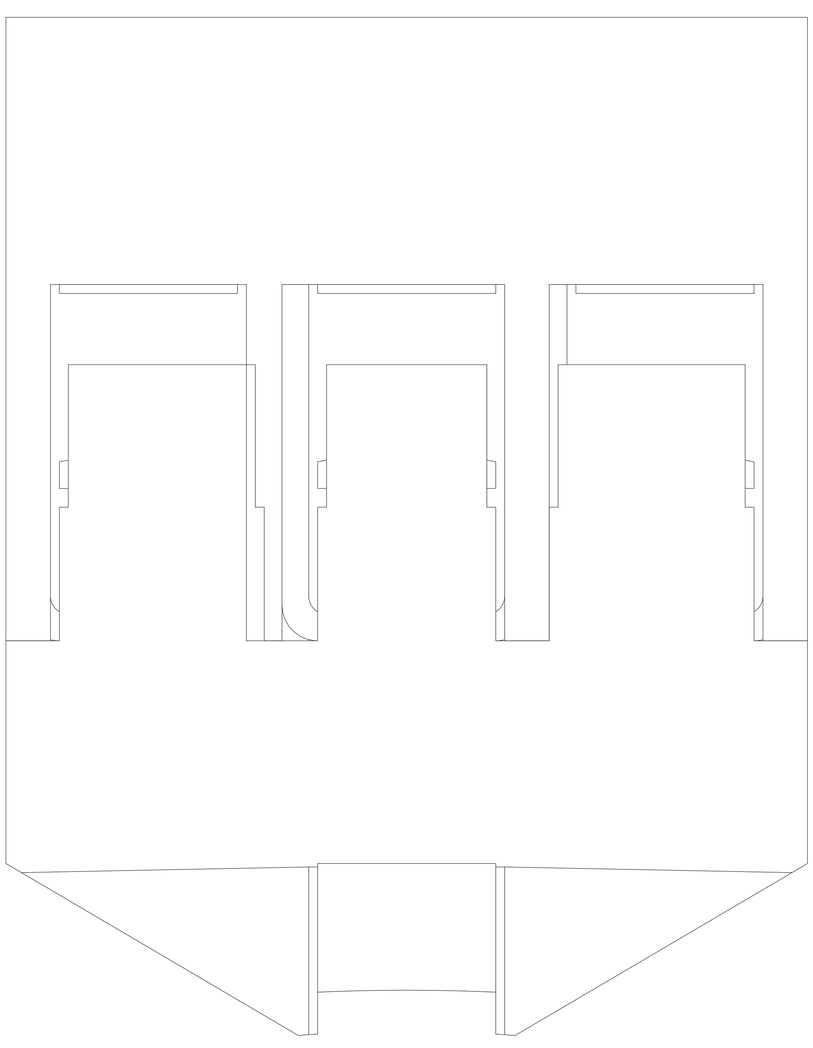
160
27.5
87